Product Description

FEATURES

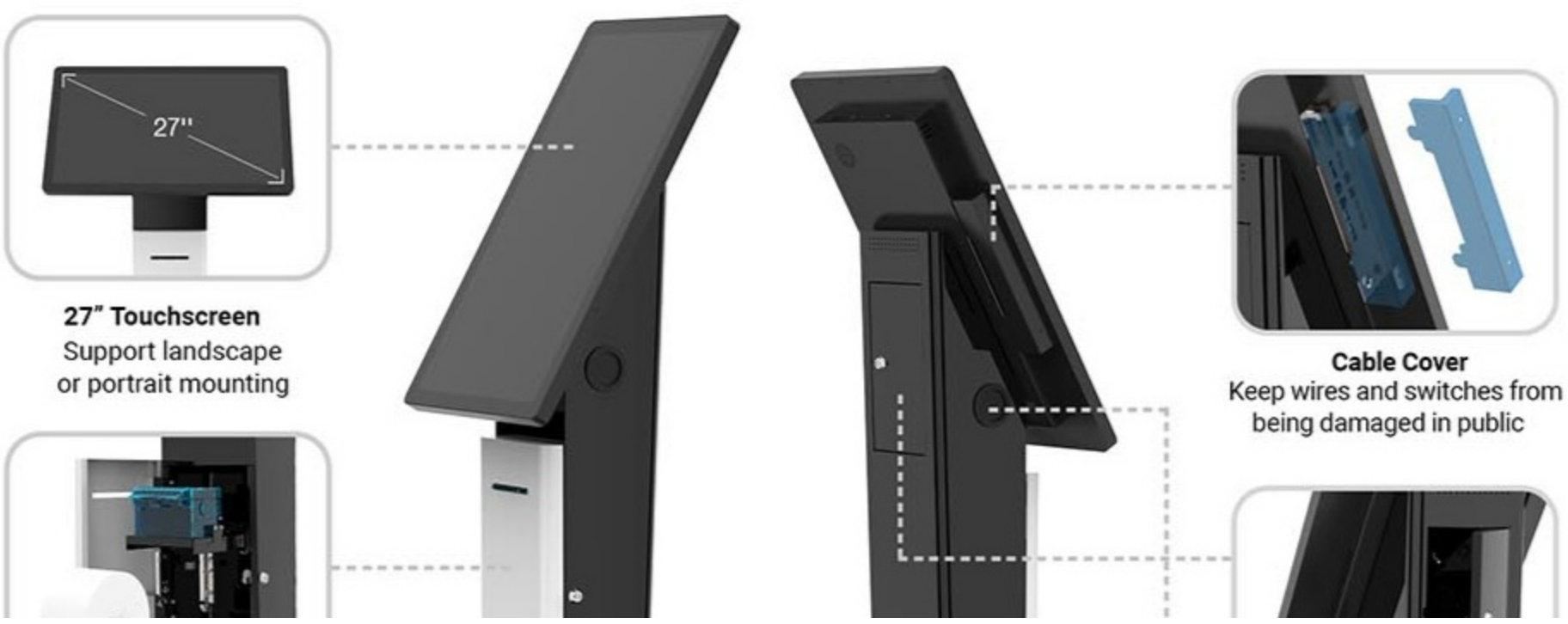

Built-in Printer

80mm thermal printer with auto-cutter and front-open door

LED Atmosphere Lamp

Lockable Cable Compartment

For internal wiring

Wire Routing Hole

Excellent Display and Fast Interacitve Experience

27 inch original commercial touchscreen, wi
1080P HD vision, 178° wide view, 10 points capacitive touch in lightin- ng response, sma operation performance comparable to table and mobile phones, equipment with two spe on both sides, bringing people excellent experience in the commerical application. Industrial control board with stable perforan maintains 24 hours uninteruption working throughout the year.

h Speed Printing Quiet Operation

lt-in auto thermal printer, with roll paper size
0mm*150mm.
tured with high-speed printing, quiet
ration, paper anti-blocking & anti-tragging

ont door is designed for the printer, easy for
er change.

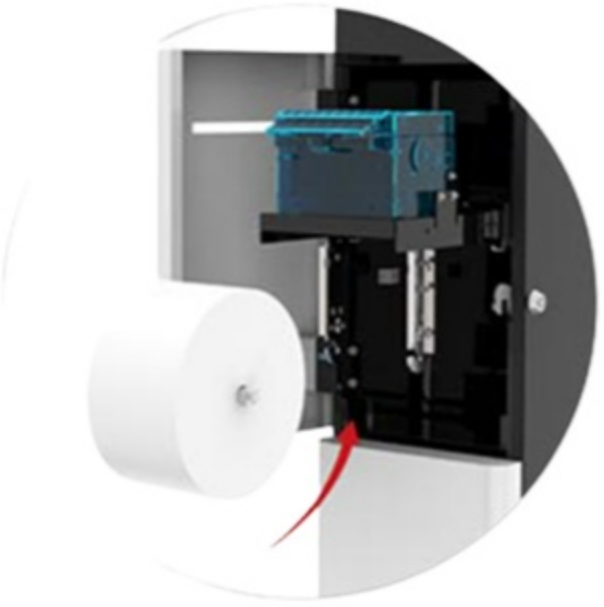

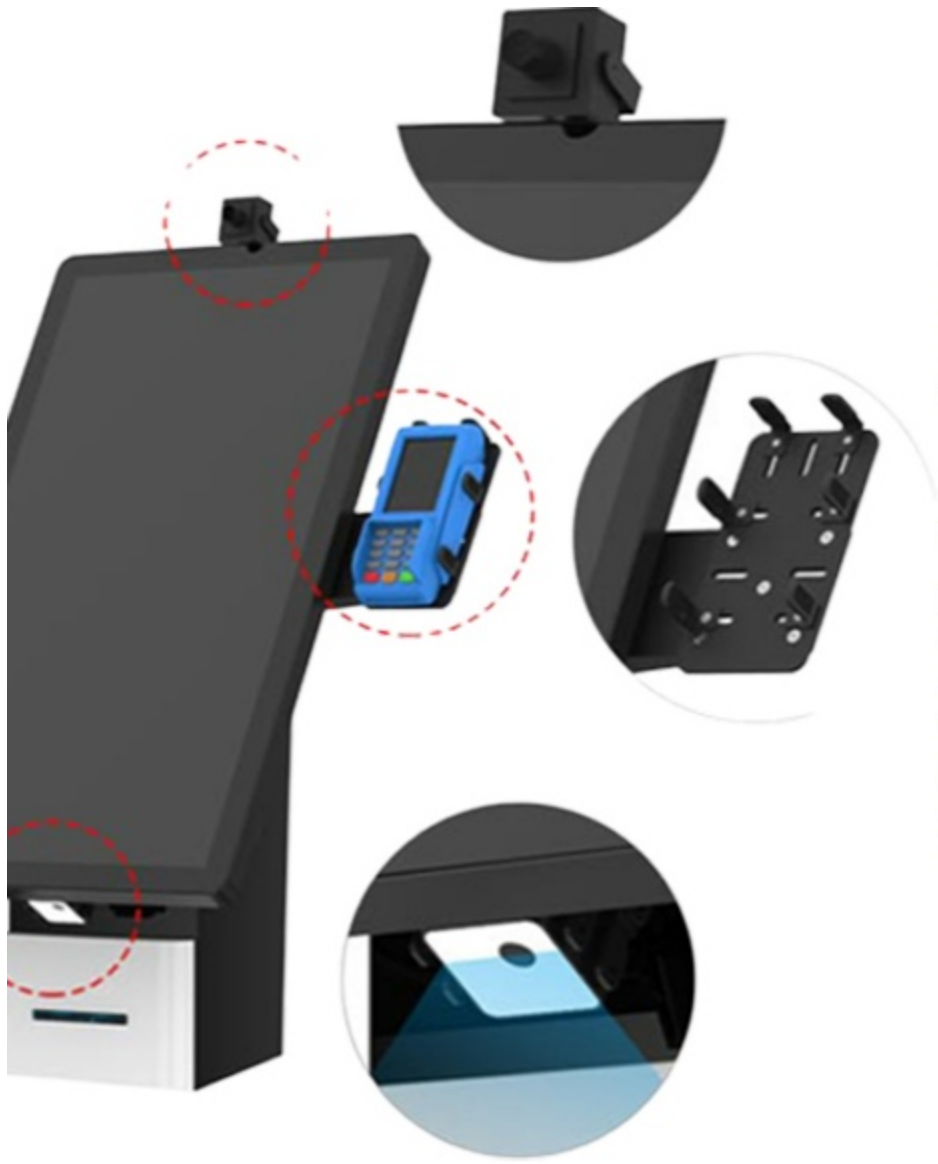

More options of Modules and Accessories

Should you require more integrated functions
we also offer custom design and realise the id
solu- tion for you.
We provide rich modules and accessories to m
kinds of application, such as 2D camera, Infrar
scanner, and card reader holder for option. Mo
custom devices are avialble.

Value Application Safety

From back panel of the screen to the base, all are applied for heavy-duty industrial steel
strong and stable with great anti-destructive ability.

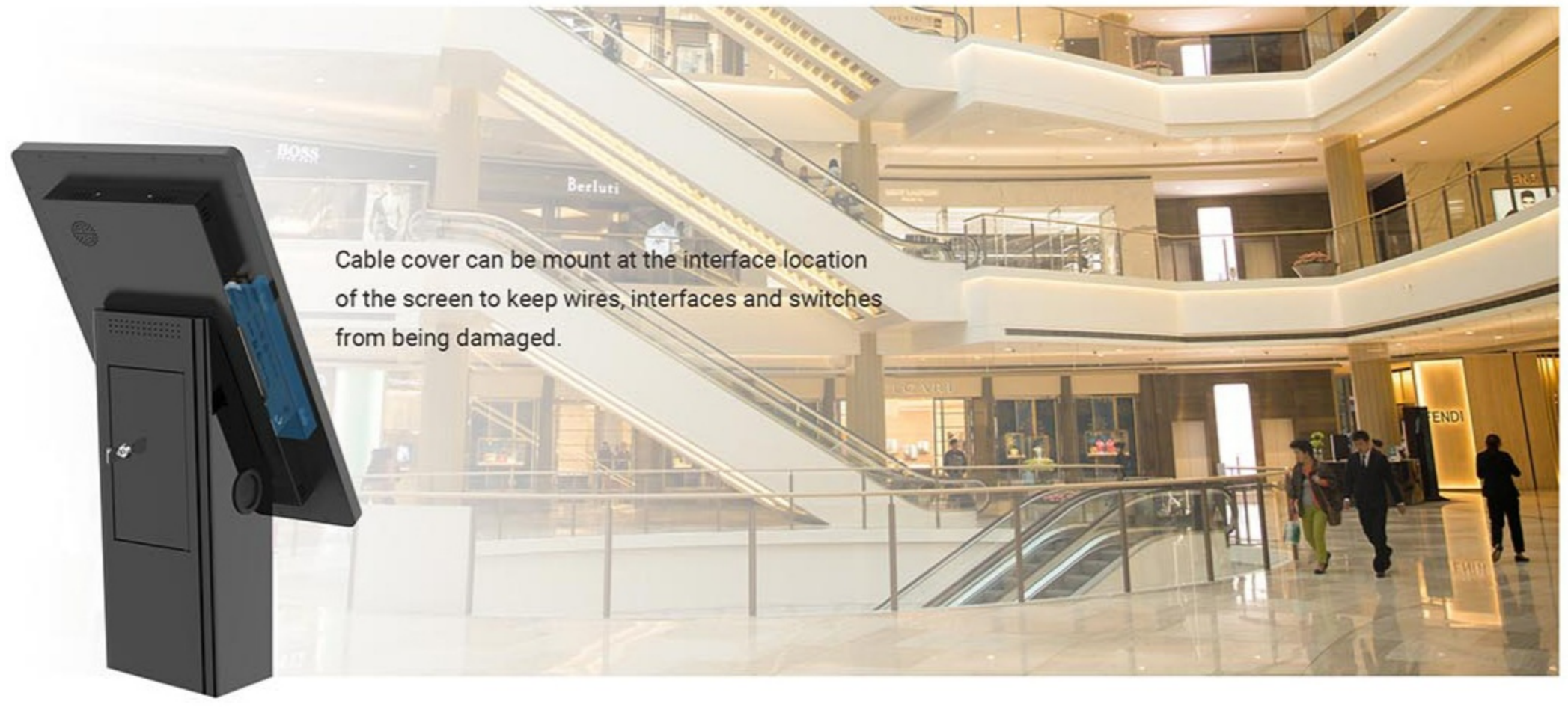

PEN CABLE
OMPARTMENT

Lockable door of p

tep 1

pen the door of

inter room

tep 2

ft the front panel

f lower stand and

ke it out

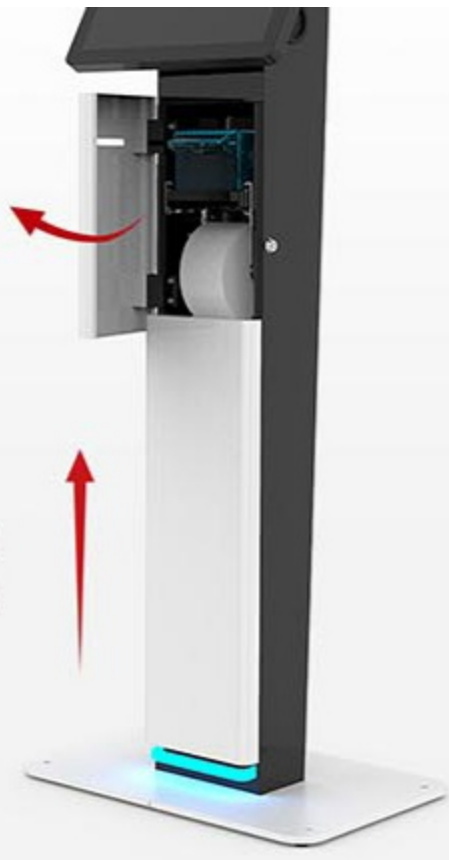

compartment, cab

compartment and

There is large interior free space inside the stand, avialable not only for internal wiring, but also as storage space for adapters, sockets, small electronic devices or tools etc.,it is neat and easy for regular maintenance.

CABLE ROUTING

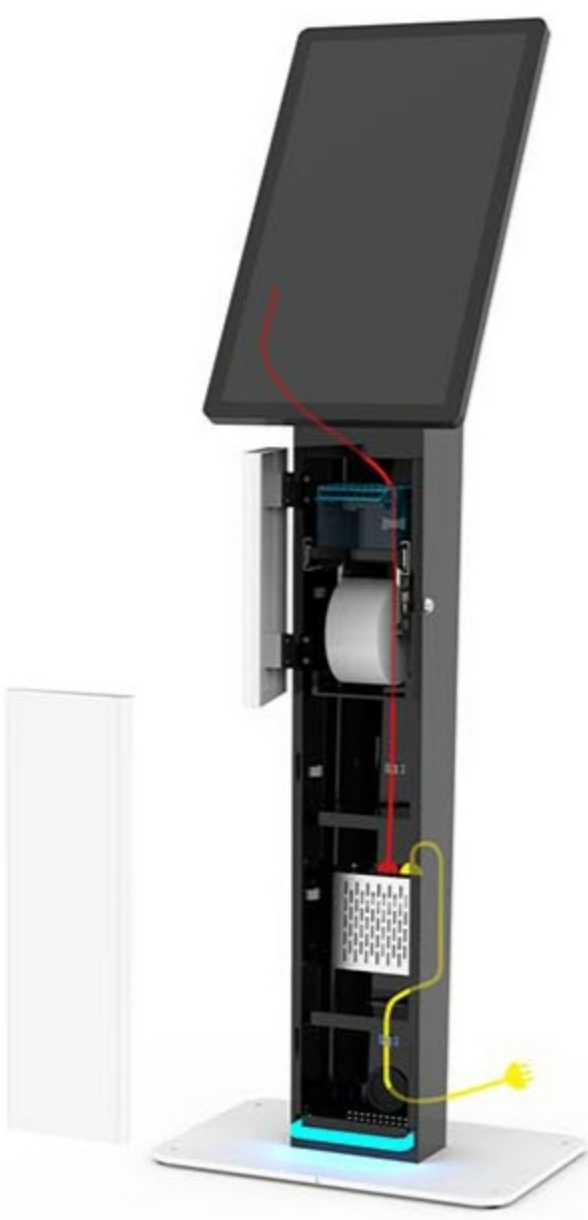

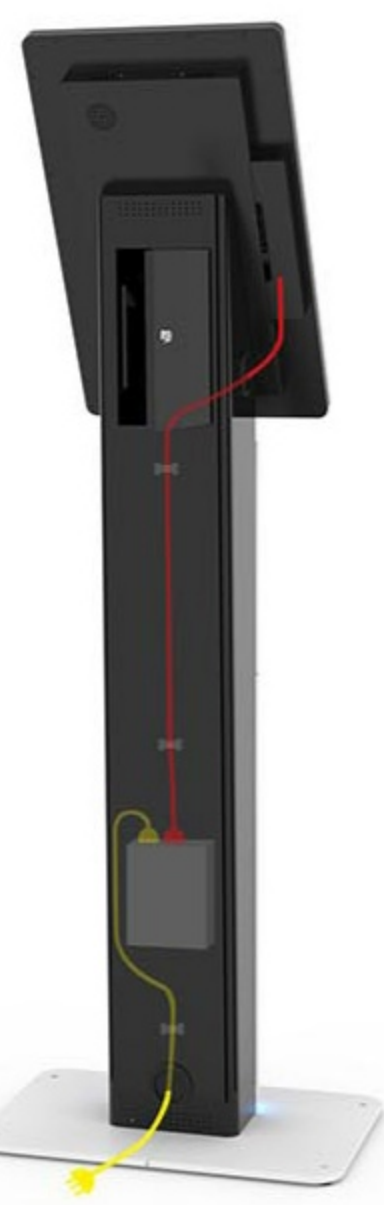

Product Application

Application

Product Specs And Assembly

Specs & Assembly

TL-2700

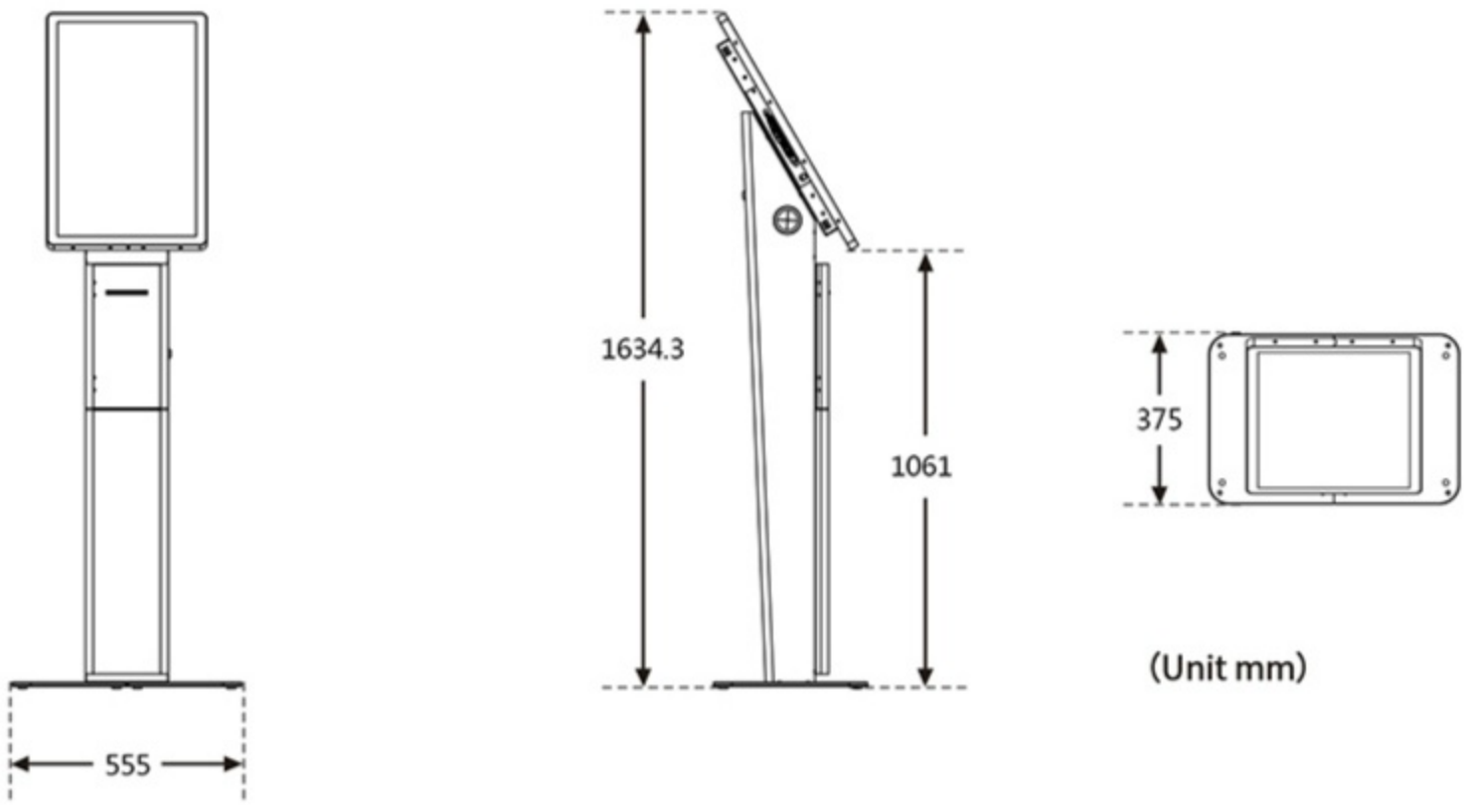

Support

10 (trial version)	CPU	Intel Celeron J6412 quad-core 2.0	
	System Memory	4G/8G	
	Disk	128G/256G(SSD)	
	Speaker	5W*2	
	Interface	USB*4/RJ45*1	
	Network	Etherner/WIFI	
roid 11	CPU	RK3568 Cortex-A55 quad-core 2.	
	System Memory	2G/4G	
	Disk	16G/32G/64G	
	Speaker	5W*2	
	Interface	USB*2/RJ45*1	
	Network	Etherner/WIFI	

een

	PCAP 10 points	Response Time	10ms

	TFT-LCD	Contrast Ratio	3000:1
n size	27"	Response Time	12ms
esolution	1920×1080	Viewing Angle	H178° V178°
:t Ratio	16:9	Display Colors	16.7M
ness	300cd/㎡	Refresh Rate	60Hz
Life	30000 hours		

wer

:age	100-240VAC,50/60Hz	Power Consumption	< 50W

closure

:erial	SPCC
'ace	Powder coated
rall Size	L555×W375×H634

rail size	L555*W375*H1034
Weight	43.5kg

pplication

rking Temperature	0~40℃	Storage Temperature	-20~60℃
rking Humidity	20%~80%	Storage Humidity	10%~90%
plication	Indoor		

uild-in Devices

nter	80mm thermal printer with auto cutter

sembly & Installation

Packing List

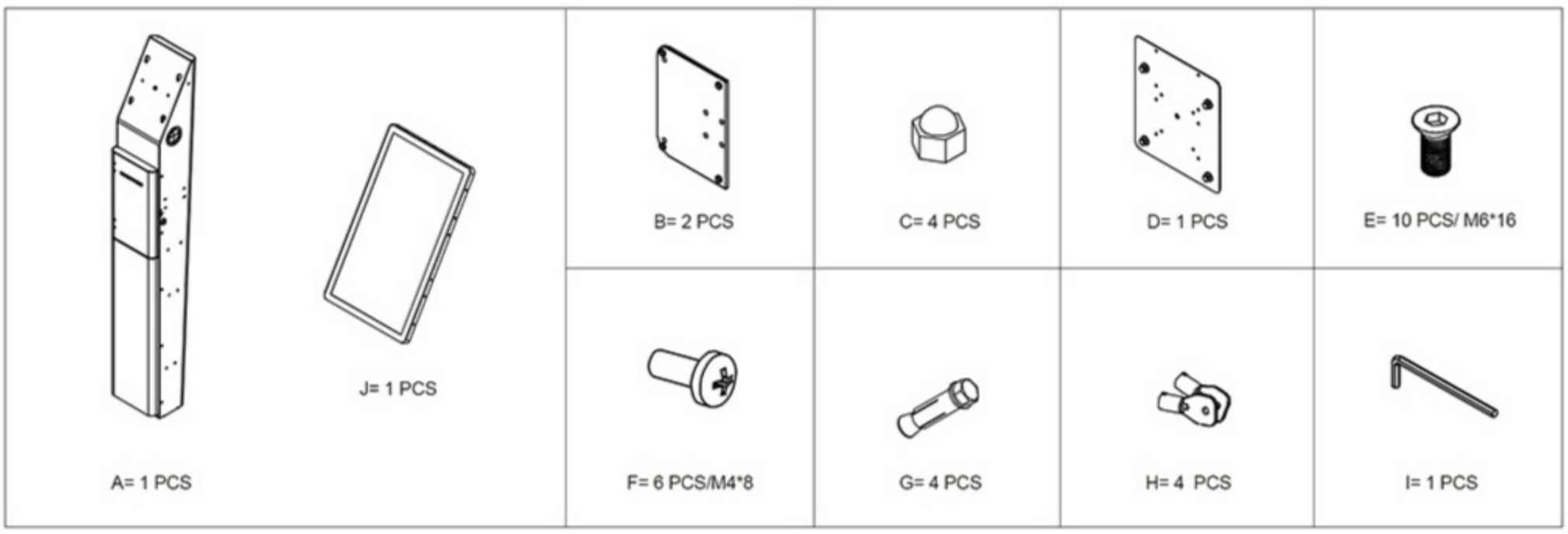

Installation

Base assembly

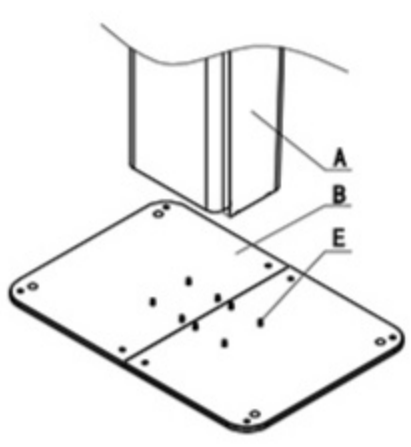

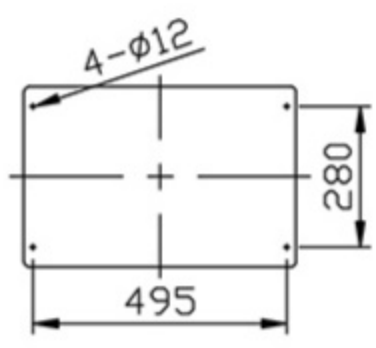

Drill holes in the ground

Use the ∅12 drill bit to drill holes with the depth of 60mm and the distance should be the same as shown.

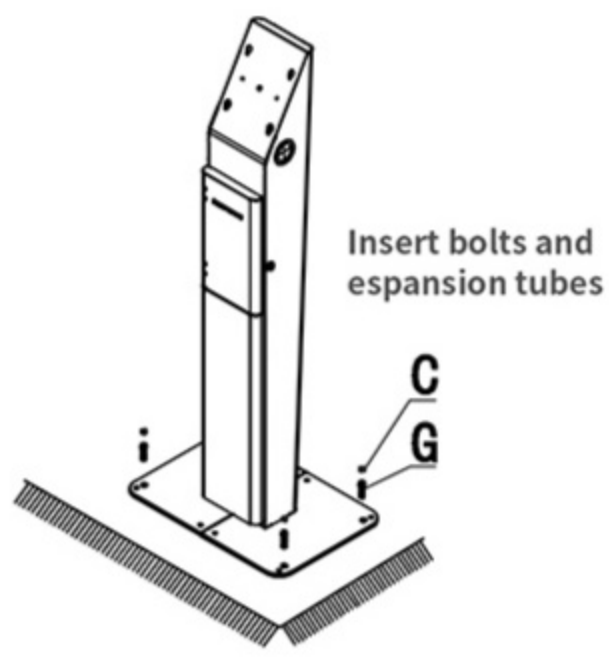

Screen assembly (21.5″-27″)	Mounting
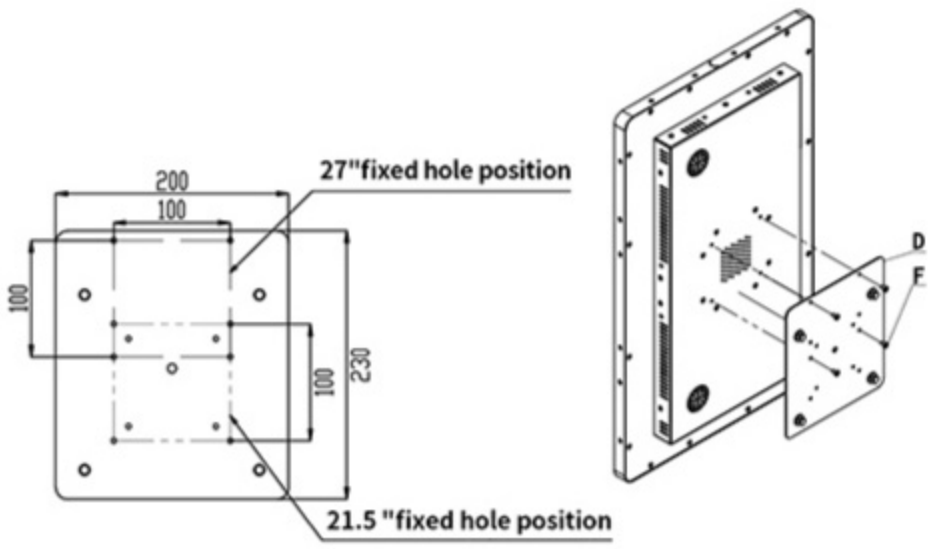	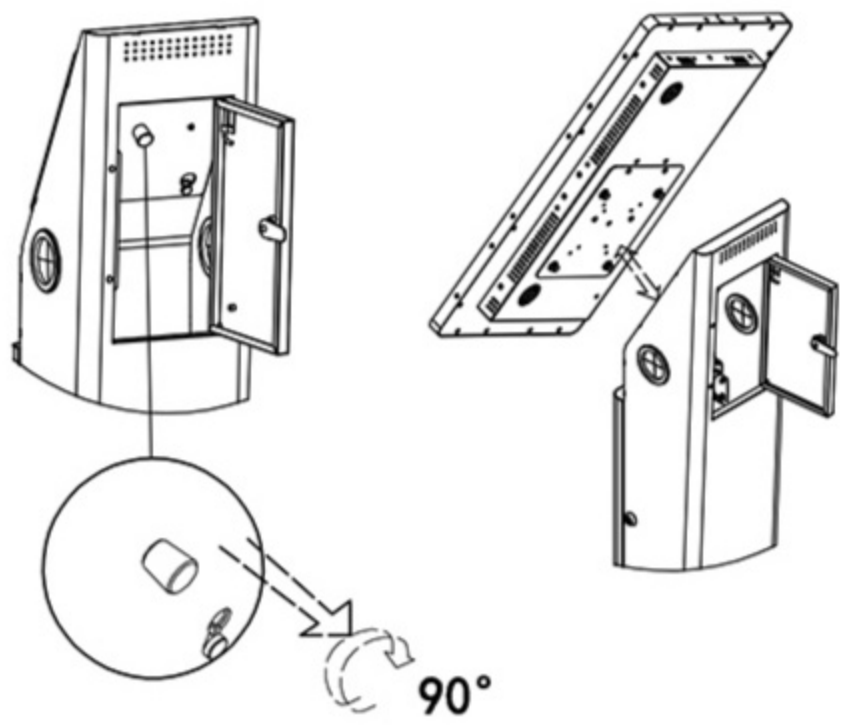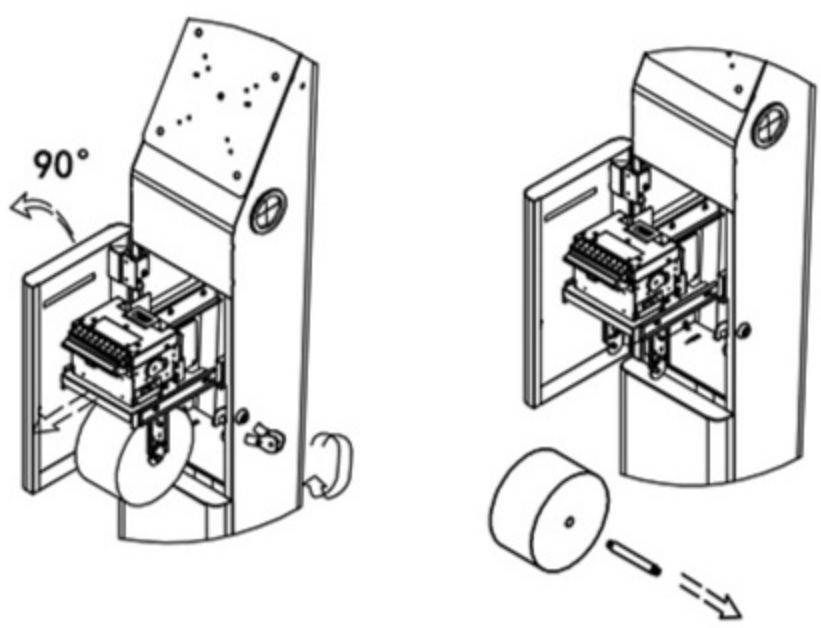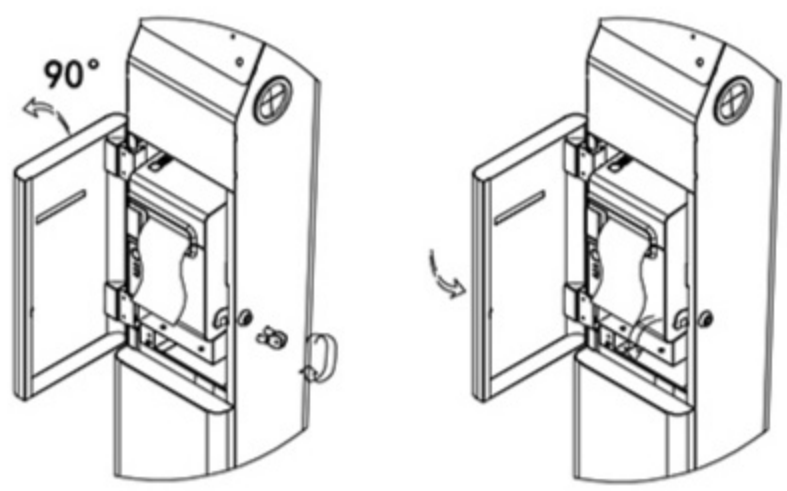
Printer 1 for paper (standard)	Printer 2 for paper (customized)